Submittal-60K Multizone

Job name:		Submitted by:	
Location:		Submitted to:	
Engineer:		Unit tag:	
Date:		Drawing number:	

Warranty information
Standard 7 years parts & compressor
Registered 12 years parts & compressor
Terms and conditions apply

Type	
Energy Star Heat Pump	●
Cold Climate Energy Star Heat Pump	○

Model numbers	
Indoor:	All Ducted
Outdoor:	KM60X6O

R32

20 Inverter

PLUS KINGHOME

AHRI

Capacity range			
Output (BTU/H)	Minimum	Rated	Max
Cooling:	8870	55000	61000
Heating:	8870	55000	62000

Heating performance			
Output (BTU/H)	Minimum	Rated	Max
47F (8.3C)	8870	55000	62000
17F (-8.3C)	9000	40000	48000
5F (-15C)	9000	31000	36400

Outdoor temparature range		
Cooling:	-30-48C	-22-118F
Heating:	-30-24C	-22-75F

Condenser specifications	
Connecting type	Screw Connection
Pre-charge length	197ft (60M)
MIN. Refrigerant Pipe Length	10 ft (3M)
MAX. Height difference (Indoor/Indoor)	82ft (25M)
MAX. Height difference (Indoor/Outdoor)	82ft (25M)
MAX. Length per Individual Indoor	82ft (25M)
MAX. Refrigerant Pipe Length (Total)	394ft (120M)
Refrigerant Type	R-32
Factory Charge	112.88oz
Additional Charge	0.2 oz/ft
Sound Pressure Level	60dB (A)

Certification		
AHRI NO.	Energy Star	
218389038	4,610,342.	

Efficency Ratings	
SEER2	19
HSPF2	8
EER (W/W)	3.4
COP (W/W)	3.8

Electrical	
Power supply	208-230V/60Hz/1Ph
Min/Max voltage	187-253Vac
MCA	37.5A
MOP	40A
Power Supply Wire	3/8 AWG
Interconnecting Wire	4/14 AWG

Features:
Electronic expansion valve
Twin Rotary compressor
Basepan heater
Compressor electric heater

Weight	
Gross weight:	251.4Lbs (114Kg)
Net weight:	224.9Lbs (102Kg)

Specifications are subject to change without notice. Manufacturer reserves the right to discontinue or modify specifications or designs without notice or without incurring obligations. All Rights reserved.

Outdoor unit Dimensions

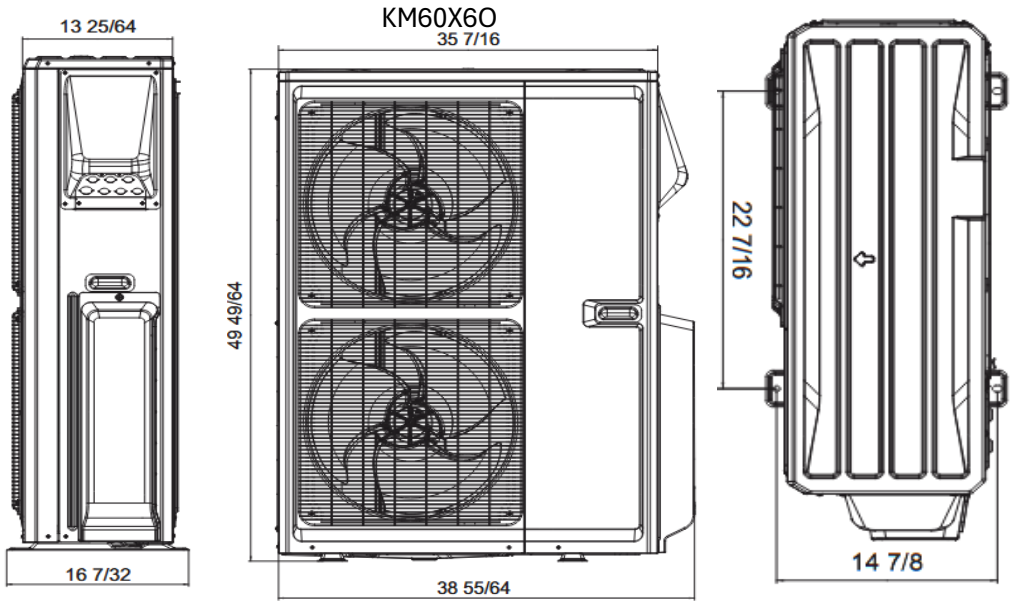

Connection sizes						
	Port 1	Port 2	Port 3	Port 4	Port 5	Port 6
Liquid pipe	1/4in (6mm)	1/4in (6mm)	1/4in (6mm)	1/4in (6mm)	1/4in (6mm)	1/4in (6mm)
Gas pipe	1/2in (12mm	1/2in (12mm)	3/8in (9.52mm)	3/8in (9.52mm)	3/8in (9.52mm)	3/8in (9.52mm)

Minimum outdoor unit clearances

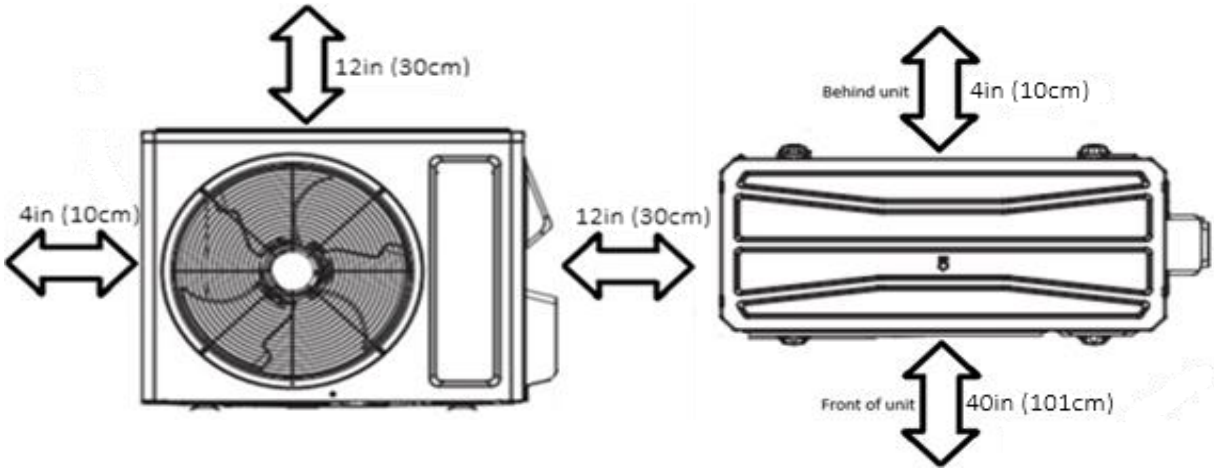

Unit must be placed a minimim 18in (45cm) above any surfaces to allow for snow clearance and defrost runoff.
Please follow local best practices and guidelines.

Specifications are subject to change without notice. Manufacturer reserves the right to discontinue or modify specifications or designs without notice or without incurring obligations. All Rights reserved.