KINGHOME

Owner's Manual

Original Instructions

Split Air Conditioner

INVERTER

Thank you for choosing our product.
Please read this Owner's Manual carefully before operation and retain it for future reference.
If you have lost the Owner's Manual, please contact the local agent or visit https://kinghomecanada.com/.

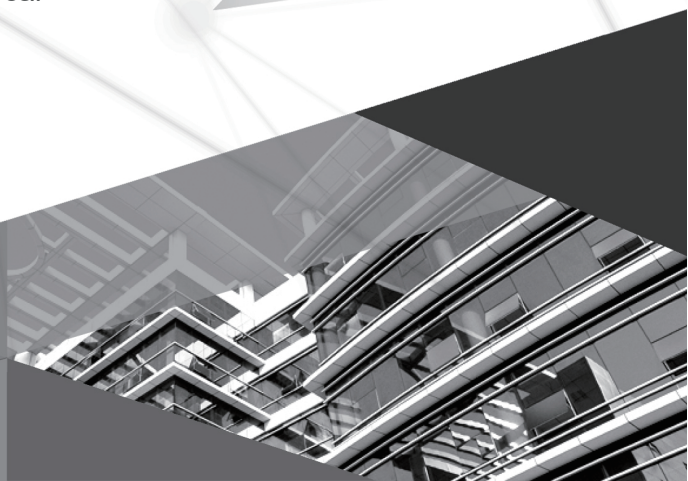

KM18X6O
KM24X6O
KM30X6O
KM36X6O
KM42X6O
KM48X6O

In line with the company's policy of continual product improvement, the aesthetic and dimensional characteristics, technical data and accessories of this appliance may be changed without notice.

CONTENTS **GENERAL INFORMATION**

GENERAL INFORMATION	CONFORMITY AND RANGE	1
	THE REFRIGERANT	2
	SAFETY OPERATION OF FLAMMABLE REFRIGERANT	2
	WARNING	4
	THE INSTRUCTIONS BEFORE USE	8
	NAME OF PARTS	9
	OUTDOOR UNIT WORKING TEMPERATURE RANGE	9
INSTALLER	ELECTRICAL CONNECTIONS	10
	INSTALLING THE OUTDOOR UNIT	16
	BLEEDING	16
	MAINTENANCE	17
	INSTALLATION DIMENSION DIAGRAM	17
	CHECK AFTER INSTALLATION	18
	SPECIALIST'S MANUAL	19

The products in this manual may be different with the real one, according to different models, some models have displayer and some models without displayer, the position and shape of the displayer please refer to the real one.

This appliance is not intended for use by persons (including children) with reduced physical, sensory or mental capabilities, or lack of experience and knowledge, unless they have been given supervision or instruction concerning use of the appliance by a person responsible for their safety.
Children should be supervised to ensure that they do not play with the appliance.

If it needs to install, move or maintain the air conditioner, please contact dealer or local service center to conduct it at first. Air conditioner must be installed, moved or maintained by appointed unit. Otherwise, it may cause serious damage or personal injury or death.
When refrigerant leaks or requires discharge during installation, maintenance, or disassembly, it should be handled by certified professionals or otherwise in compliance with local laws and regulations.

This appliance incorporates an earth connection for functional purposes only.
Note: Only for models with ground wire from PCB.

DANGER Indicates a hazardous situation that, if not avoided, will result in death or serious injury.

WARNING Indicates a hazardous situation that, if not avoided, could result in death or serious injury.

CAUTION Indicates a hazardous situation that, if not avoided, may result in minor or moderate injury.

NOTICE Indicates important but not hazard-related information, used to indicate risk of property damage.

 Indicates a hazard that would be assigned a signal word WARNING or CAUTION.

EXCEPTION CLAUSES GENERAL INFORMATION

Manufacturer will bear no responsibilities when personal injury or property loss is caused by the following reasons.

1.Damage the product due to improper use or misuse of the product;

2.Alter, change, maintain or use the product with other equipment without abiding by the instruction manual of manufacturer;

3.After verification, the defect of product is directly caused by corrosive gas;

4.After verification, the defects are due to improper operation during transportation of product;

5.Operate, repair, maintain the unit without abiding by instruction manual or related regulations;

6.After verification, the problem or dispute is caused by the quality specification or performance of parts and components that produced by other manufacturers;

7.The damage is caused by natural calamities, bad using environment or force majeure.

CONFORMITY AND RANGE GENERAL INFORMATION

Please read this owner's manual carefully before operating the unit and keep it carefully for consultation.

Only use the air conditioner as instructed in this booklet. These instructions are not intended to cover every possible condition and situation. As with any electrical household appliance, common sense and caution are therefore always recommended for installation, operation and maintenance.

The refrigerant



Appliance filled with flammable magas R32.



Before install the appliance, read the installation manual first.



Before use the appliance, read the owner's manual first.



Before repair the appliance, read the service manual first.

- To realize the function of the air conditioner unit, a special refrigerant circulates in the system. The used refrigerant is the fluoride R32, which is specially cleaned. The refrigerant is flammable and inodorous. Furthermore, it can lead to explosion under certain conditions. But the flammability of the refrigerant is very low. It can be ignited only by fire.
- Compared to common refrigerants, R32 is a nonpolluting refrigerant with no harm to the ozonosphere. The influence upon the greenhouse effect is also lower. R32 has got very good thermodynamic features which lead to a really high energy efficiency. The units there fore need a less filling.

WARNING

- Appliance filled with flammable gas R32.
- The appliance shall be stored in a room without continuously operating ignition sources. (for example:open flames,an operating gas appliance or an operating electric heater.)
- The appliance shall be stored in a well-ventilated area where the room size corresponds to the room area as specified for operation.
- The appliance shall be stored so as to prevent mechanical damage from occurring.
- Ducts connected to an appliance shall not contain an ignition source.
- Keep any required ventilation openings clear of obstruction.
- Do not pierce or burn.
- Be aware that refrigerants may not contain an odour.
- Do not use means to accelerate the defrosting process or to clean,other than those recommended by the manufacturer.
- Servicing shall be performed only as recommended by the manufacturer.
- Should repair be necessary,contact your nearest authorized Service Centre. Any repairs carried out by unqualified personnel may be dangerous.
- Compliance with national gas regulations shall be observed.
- Read specialist's manual.



Safety operation of flammable refrigerant

Qualification of workers

Qualification of the working personnel for maintenance, service and repair operations should according to UL 60335-2 -40、CAN/C-SA-C22.2 No. 60335-2-40：22 Annex HH.. Every working procedure that affects safety means shall only be carried out by competent persons according to Annex HH. Special training additional to usual refrigerating equipment repair procedures is required when equipment with FLAMMABLE REFRIGERANTS is affected.

Installation notes

- It is not allowed to drill hole or burn the connection pipe.
- Leak test is a must after installation.
- Installation height and minimum room area. See the matching internal machine Instruction manual for details.

Maintenance notes

- Check whether the maintenance area or the room area meet the requirement of the nameplate.

Safety operation of flammable refrigerant

- It's only allowed to be operated in the rooms that meet the requirement of the nameplate.

- Check whether the maintenance area is well-ventilated.
  - The continuous ventilation status should be kept during the operation process.
- Check whether there is fire source or potential fire source in the maintenance area.
  - The naked flame is prohibited in the maintenance area; and the "no smoking" warning board should be hanged.
- Check whether the appliance mark is in good condition.
  - Replace the vague or damaged warning mark.

Welding

- If you should cut or weld the refrigerant system pipes in the process of maintaining, please follow the steps as below:
  a. Shut down the unit and cut power supply
  b. Eliminate the refrigerant
  c. Vacuuming
  d. Clean it with N_2 gas
  e. Cutting or welding
  f. Carry back to the service spot for welding
- The refrigerant should be recycled into the specialized storage tank.
- Make sure that there isn't any naked flame near the outlet of the vacuum pump and it's well-ventilated.

Filling the refrigerant

- Use the refrigerant filling appliances specialized for R32. Make sure that different kinds of refrigerant won't contaminate with each other.
- The refrigerant tank should be kept upright at the time of filling refrigerant.
- Stick the label on the system after filling is finished (or haven't finished).
- Don't overfilling.
- After filling is finished, please do the leakage detection before test running; another time of leak detection should be done when it's removed.

Safety instructions for transportation and storage

- Please use the flammable gas detector to check before unload and open the container.
- No fire source and smoking.
- According to the local rules and laws.

Safety of Construction

- For appliances using FLAMMABLE REFRIGERANTS, all joints made in the installation between parts of the REFRIGERATING SYSTEM, with at least one part charged, shall be made in accordance with the following:

  – A brazed, welded, or mechanical connection shall be made before opening the valves to permit refrigerant to flow between the REFRIGERATING SYSTEM parts. A vacuum valve shall be provided to evacuate the interconnecting pipe or any uncharged REFRIGERATING SYSTEM part.

  – Mechanical connectors used indoors shall comply with ISO 14903. When mechanical connectors are reused indoors, sealing parts shall be renewed. When flared joints are reused indoors, the flare part shall be refabricated.

  – Refrigerant tubing shall be protected or enclosed to avoid damage.

  – Flexible refrigerant connectors (such as connecting lines between the indoor and outdoor unit) that may be displaced during NORMAL OPERATION shall be protected against mechanical damage.

Pressure test and leak detect

- After completion of field piping for split systems, the field pipework shall be pressure tested with an inert gas and then vacuum tested prior to refrigerant charging, according to the following requirements.

  The minimum test pressure for the low side of the system shall be the low side design pressure and the minimum test pressure for the high side of the system shall be the high side design pressure, unless the high side of the system, cannot be isolated from the low side of the system in which case the entire system shall be pressure tested to the low side design pressure.
- Field-made refrigerant joints indoors shall be tightness tested. The test method shall have a sensitivity of 5 grams per year of refrigerant or better under a pressure of at least 0,25 times the maximum allowable pressure. No leak shall be detected.

Operation and Maintenance

- This appliance can be used by children aged from 8 years and above and persons with reduced physical, sensory or mental capabilities or lack of experience and knowledge if they have been given supervision or instruction concerning use of the appliance in a safe way and understand the hazards involved.
- Children shall not play with the appliance.
- Cleaning and user maintenance shall not be made by children without supervision.
- Do not connect air conditioner to multi-purpose socket. Otherwise, it may cause fire hazard.
- Do disconnect power supply when cleaning air conditioner. Otherwise, it may cause electric shock.
- If the supply cord is damaged, it must be replaced by the manufacturer, its service agent or similarly qualified persons in order to avoid a hazard.
- Do not wash the air conditioner with water to avoid electric shock.
- Do not spray water on indoor unit. It may cause electric shock or malfunction.
- After removing the filter, do not touch fins to avoid injury.
- Do not use fire or hair dryer to dry the filter to avoid deformation or fire hazard.
- Maintenance must be performed by qualified professionals. Otherwise, it may cause personal injury or damage.
- Do not repair air conditioner by yourself. It may cause electric shock or damage. Please contact dealer when you need to repair air conditioner.
- Do not extend fingers or objects into air inlet or air outlet. It may cause personal injury or damage.
- Do not block air outlet or air inlet. It may cause malfunction.
- Do not spill water on the remote controller, otherwise the remote controller may be broken.
- When below phenomenon occurs, please turn off air conditioner and disconnect power immediately, and then contact the dealer or qualified professionals for service.
  - Power cord is overheating or damaged.
  - There’s abnormal sound during operation.
  - Circuit break trips off frequently.
  - Air conditioner gives off burning smell.
  - Indoor unit is leaking.

- If the air conditioner operates under abnormal conditions, it may cause malfunction， electric shock or fire hazard.
- When turning on or turning off the unit by emergency operation switch, please press this switch with an insulating object other than metal.
- Do not step on top panel of outdoor unit, or put heavy objects. It may cause damage or personal injury.
- For appliances made up of more than one factory made assembly specified by the manufacturer to be used together, instructions shall be provided for completing the assembly to ensure compliance with the requirements.

Attachment

- Installation must be performed by qualified professionals. Otherwise, it may cause personal injury or damage.
- Must follow the electric safety regulations when installing the unit.
- According to the local safety regulations, use qualified power supply circuit and circuit break.
- Do install the circuit break. If not, it may cause malfunction.
- Means for disconnection must be incorporated in the fixed wiring in accordance with the wiring rules.
- Including an circuit break with suitable capacity, please note the following table. Air switch should be included magnet buckle and heating buckle function, it can protect the circuit-short and overload.
- Air Conditioner should be properly grounded. Incorrect grounding may cause electric shock.
- Don't use unqualified power cord.
- Make sure the power supply matches with the requirement of air conditioner. Unstable power supply or incorrect wiring may result in electric shock, fire hazard or malfunction. Please install proper power supply cables before using the air conditioner.
- Properly connect the live wire, neutral wire and grounding wire of power socket.
- Be sure to cut off the power supply before proceeding any work related to electricity and safety.
- Do not put through the power before finishing installation.
- If the supply cord is damaged, it must be replaced by the manufacturer, its service agent or similarly qualified persons in order to avoid a hazard.
- The temperature of refrigerant circuit will be high, please keep the interconnection cable away from the copper tube.

- The appliance shall be installed in accordance with national wiring regulations.
- Installation must be performed in accordance with the requirement of NEC and CEC by authorized personnel only.
- The air conditioner is the first class electric appliance. It must be properly grounding with specialized grounding device by a professional. Please make sure it is always grounded effectively, otherwise it may cause electric shock.
- The yellow-green wire in air conditioner is grounding wire, which can't be used for other purposes.
- The grounding resistance should comply with national electric safety regulations.
- The appliance must be positioned so that the plug is accessible.
- All wires of indoor unit and outdoor unit should be connected by a professional.
- If the length of power connection wire is insufficient， please contact the supplier for a new one. Avoid extending the wire by yourself.
- For the air conditioner with plug,the plug should be reachable after finishing installation.
- For the air conditioner without plug, an circuit break must be installed in the line.
- If you need to relocate the air conditioner to another place, only the qualified person can perform the work. Otherwise, it may cause personal injury or damage.
- Select a location which is out of reach for children and far away from animals or plants.If it is unavoidable, please add the fence for safety purpose.
- The indoor unit should be installed close to the wall.
- Before operation, please confirm whether power specification complies with that on nameplate.
- Before cleaning or maintaining the air conditioner, please turn off air conditioner and pull out the power plug.
- Make sure the power cord hasn’ t been pressed by hard objects.
- Do not pull or drag the power cord to pull out the power plug or move the air conditioner.
- Do not insert or pull out the power plug with wet hands. Please use the grounded power. Make sure the grounding is reliable.
- If the SUPPLY CORD is damaged, it must be replaced by the manufacturer, its service agent or similarly qualified persons in order to avoid a hazard.
- If abnormal condition occurs (e. g. burned smell), please disconnect power at once and then contact local dealer.
- When nobody is taking care of the unit, please turn it off and remove the power plug or disconnect power.

- Do not splash or pour water on air conditioner. Otherwise, it may cause short circuit or damage to air conditioner.
- Prohibit operating heating equipment around the air conditioner.
- Prohibit operating the unit in the bathroom or laundry room.
- Far away from fire source, inflammable and explosive objects.
- Keep children from playing or climbing on the air conditioner.
- Do not put or hang dripping objects above the air conditioner.
- Do not repair or disassemble the air conditioner by yourself.
- Do not block air outlet or air inlet.
- Prohibit inserting any objects into the air conditioner.
- Do not through sundries into the air duct. If there are sundries get into the air duct, please contact the professionals to deal with it.
- Do not use an extension cord.
- A fuse or circuit breaker should be added at the product circuit. Please refer to the MOP value on the nameplate for the detailed specification.
- The appliance shall be installed in accordance with national wiring regulations.
- If a STATIONARY APPLIANCE is not fitted with a SUPPLY CORD and a plug, an all-pole disconnection switch having a contact separation of at least 3mm in all poles should be connected in fixed wiring.

WARNING

★ When having a burning smell or smoke,please turn off the power supply and contact with the service center.

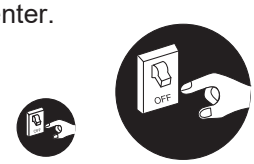

If the abnormity still exists,the unit may be damaged,and may cause electric shock or fire.

★ The power supply must adopt the special circuit that with air switch protection and assure it has enough capacity.The unit will be turned on or off according to your requirement automatically,please do not turn on or turn off the unit frequently,otherwise disadvantage effect may be caused to the unit.

★ Never cut off or damage power cables and control wires. If the power cable and signal control wire were damaged, change them by professional.



★ Power must adopts the special circuit to prevent fire.

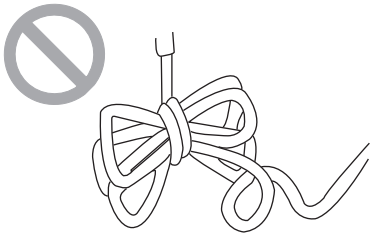

Otherwise, it can cause electric shock or fire.

★ Disconnect the power supply if long putting the air conditioner out of use.



Otherwise,the accumulated dusts may cause overheating or fire.

★ Never damage the electric wire or use the electric wire which is not appointed.



Otherwise,it will cause overheating or fire.

★ When cleaning,it is necessary to stop driving and turn off the power supply.

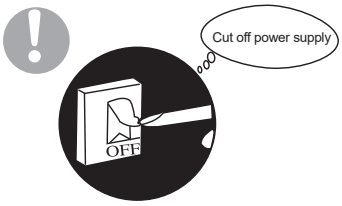

Otherwise,it may cause electric shock or damage.

★ Rated voltage of this air conditioner 208/230V, 60Hz, The compressor will vibrate sharply if the voltage is too low, resappointed. amage to refrigerating system. Electrical component are easy to damage if the voltage is too high.

★ Don't attempt to repair the air conditioner by yourself.

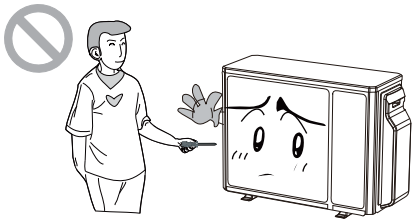

The wrong repair will lead to an electric shock or fire,so you should contact the service center to repair.

★ Please note whether the installed stand is firm enough or not.

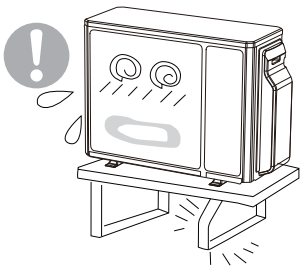

If it is damaged, it may lead to the fall of the unit and cause the injury.

★ Don't step on the top of the outdoor unit or place something on it.

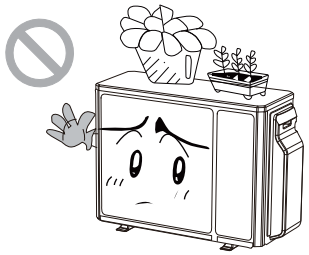

As falling off the outdoor unit can be dangerous.

★ Earthing: The unit must be reliably earthed.The earthing cable shall be connected to the special earthing device in the construction.

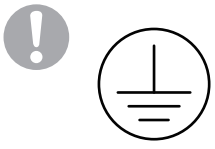

WARNING

- Be sure to cut off the power supply before cleaning the air conditioner; otherwise electric shock might happen.
- Wetting of air conditioner may cause the risk of electric shock. Make sure not to wash your air conditioner in any case.
- Volatile liquids such as thinner or gasoline will cause damage to the appearance of air conditioner. (Only use soft dry cloth moist cloth clean the air conditioner cabinet).
- This product must not be disposed together with the domestic waste.
  This product has to be disposed at an authorized place for recycling of electrical and electronic appliances.
- The temperature of refrigerant circuit will be high,please keep the interconnection cable away from the copper tube.

OUTDOOR UNIT	
No.	Description
1	Air outlet grille
2	Valve

Note: The above figures are only intended to a simple diagram of the appliance and may not correspond to the appearance of the units that have been purchased.

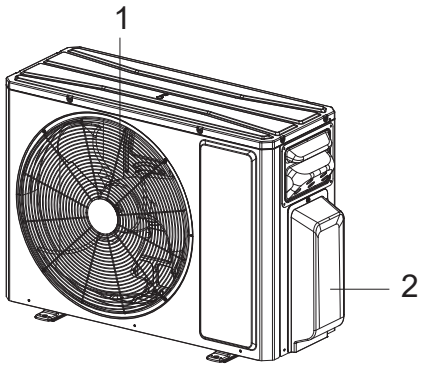

	Indoor side DB/WB(°C/°F)	Outdoor side DB/WB(°C/°F)
Maximum cooling	26.7/19.4(80/67)	48/24(118/75)
Maximum heating	26.7/-(80/-)	23.9/18.3(75/65)

- The operating temperature range (outdoor temperature):
  Cooling only unit: -30°C ~ 48°C(-22°F ~ 118°F);
  Heat pump unit: for cooling mode is -30°C ~ 48°C(-22°F ~ 118°F);
  for heating mode is -30°C ~ 24°C(-22°F ~ 75.2°F).

1. Remove the handle at the right side plate of the outdoor unit (one screw).
2. Remove the cable clamp, connect the power connection cable with the terminal at the row of connection and fix the connection. The fitting line distributing must be consistent with the indoor unit. terminal of line bank. Wiring should meet that of indoor unit.
3. Fix power connection wire by wire clamp.
4. Ensure wire has been fixed well.
5. Install the handle.

Including an air switch with suitable capacity, please note the following table. Air switch should be included magnet buckle and heating buckle function, it can protect the circuit-short and overload. (Caution: please do not use the fuse only for protect the circuit)

Air-conditioner	MOCP
KM18X6O	20A

An all-pole disconnection switch having a contact separation of at least 3mm in all pole should be connected in fixed wiring.

Wrong wire connection may cause malfunction of some electric components.After fixing cable, ensure that leads between connection to fixed point have some space.

The connection pipes and the connection wirings of the unit A, unit B must be corresponding to each other respective.

The appliance shall be installed in accordance with national wiring regulations.

Note: The above figures are only intended to be a simple diagram of the appliance and may not correspond to the appearance of the units that have been purchased.

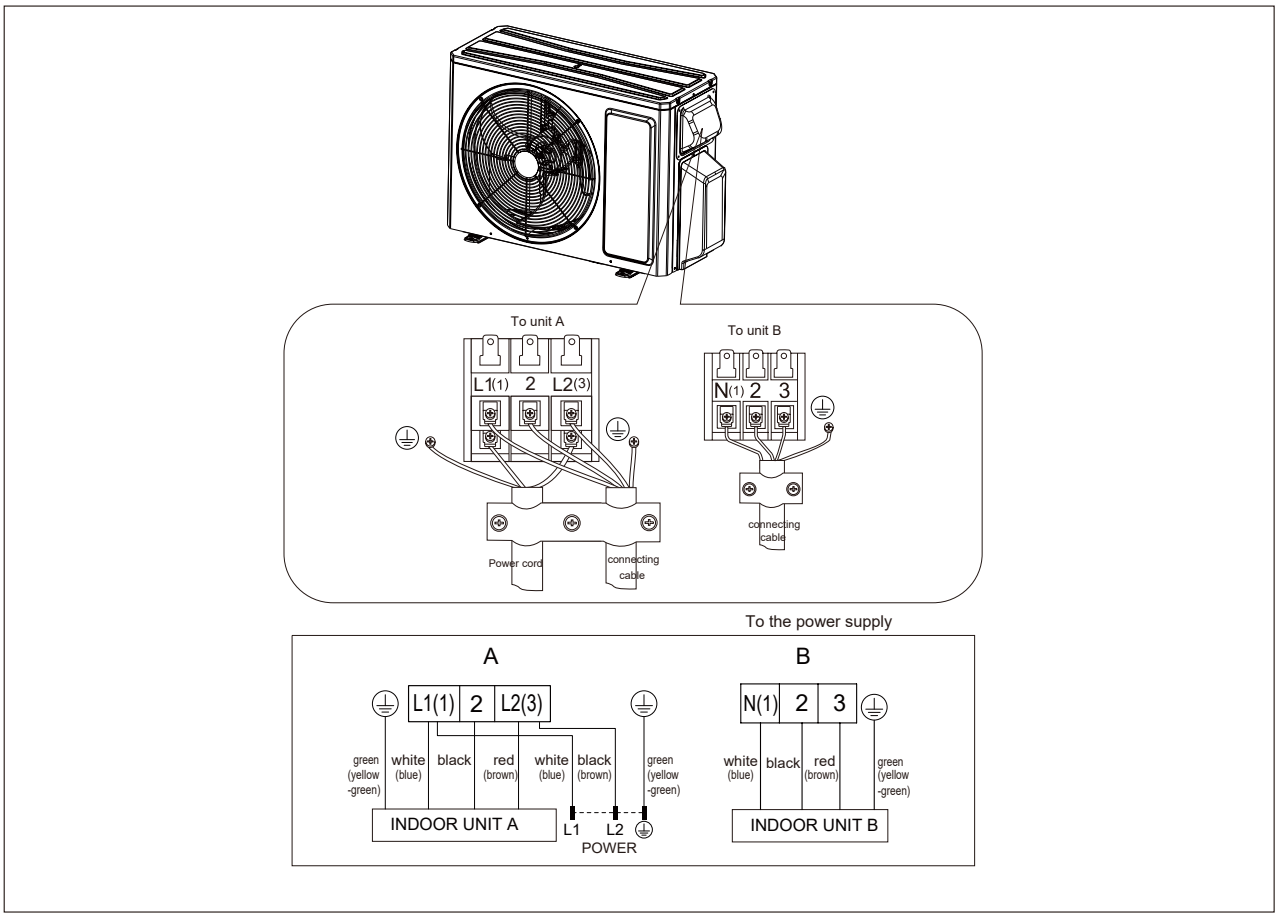

1. Remove the handle at the right side plate of the outdoor unit (one screw).
2. Remove the cable clamp, connect the power connection cable with the terminal at the row of connection and fix the connection. The fitting line distributing must be consistent with the indoor unit. terminal of line bank. Wiring should meet that of indoor unit.
3. Fix power connection wire by wire clamp.
4. Ensure wire has been fixed well.
5. Install the handle.

Including an air switch with suitable capacity, please note the following table. Air switch should be included magnet buckle and heating buckle function, it can protect the circuit-short and overload. (Caution: please do not use the fuse only for protect the circuit)

Air-conditioner	MOCP
KM24X6O	25A

An all-pole disconnection switch having a contact separation of at least 3mm in all pole should be connected in fixed wiring.

Wrong wire connection may cause malfunction of some electric components.After fixing cable, ensure that leads between connection to fixed point have some space.

The connection pipes and the connection wirings of the unit A, unit B and unit C must be corresponding to each other respective.

The appliance shall be installed in accordance with national wiring regulations.

Note: The above figures are only intended to be a simple diagram of the appliance and may not correspond to the appearance of the units that have been purchased.

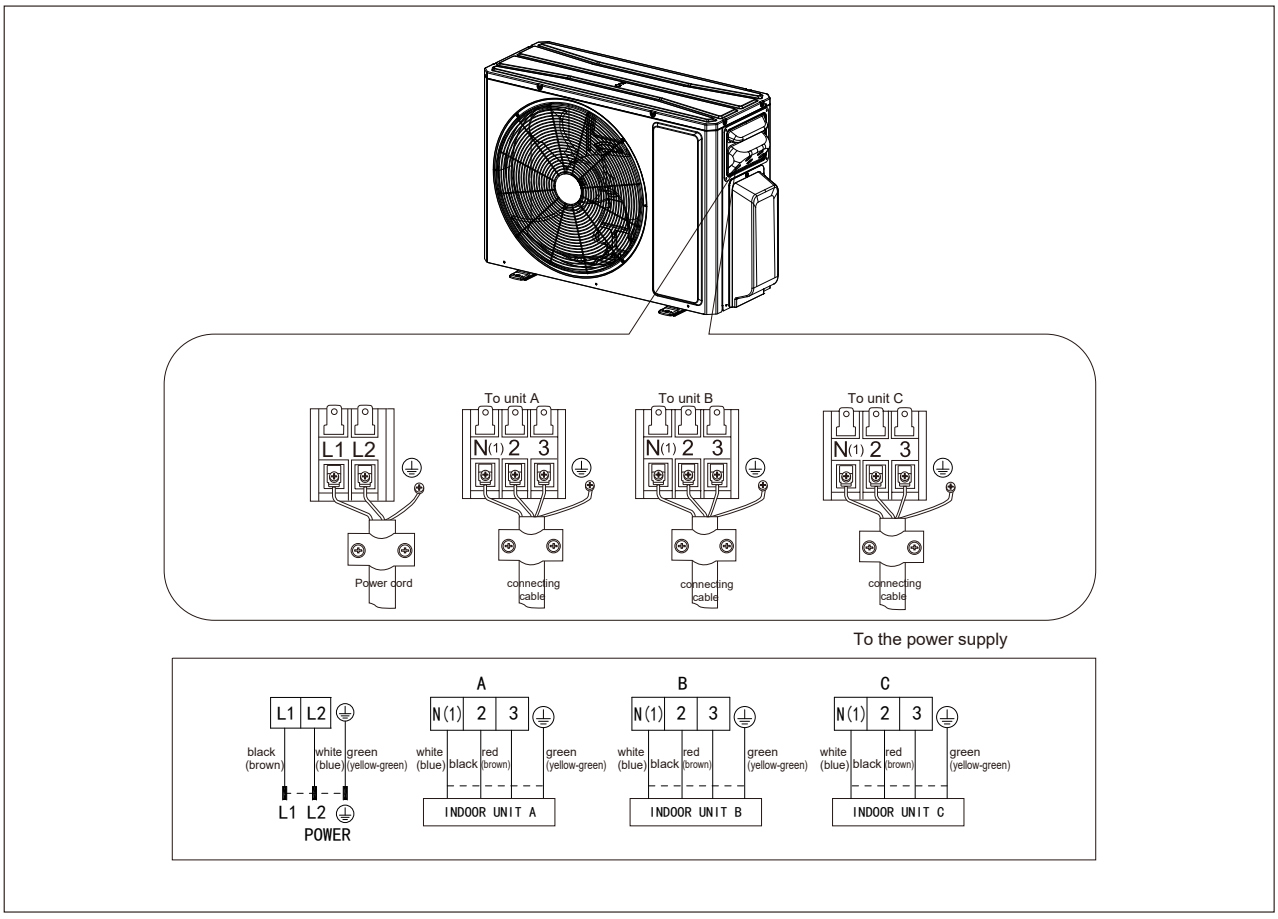

1. Remove the handle at the right side plate of the outdoor unit (one screw).
2. Remove the cable clamp, connect the power connection cable with the terminal at the row of connection and fix the connection. The fitting line distributing must be consistent with the indoor unit. terminal of line bank. Wiring should meet that of indoor unit.
3. Fix power connection wire by wire clamp.
4. Ensure wire has been fixed well.
5. Install the handle.

Including an air switch with suitable capacity, please note the following table. Air switch should be included magnet buckle and heating buckle function, it can protect the circuit-short and overload. (Caution: please do not use the fuse only for protect the circuit)

Air-conditioner	MOCP
KM30X6O	30A
KM36X6O	35A

An all-pole disconnection switch having a contact separation of at least 3mm in all pole should be connected in fixed wiring.

Wrong wire connection may cause malfunction of some electric components.After fixing cable, ensure that leads between connection to fixed point have some space.

The connection pipes and the connection wirings of the unit A, unit B, unit C and unit D must be corr-esponding to each other respective.

The appliance shall be installed in accordance with national wiring regulations.

WARNING: Communication cables should be laid out through cabling trough, conduit tube or cable channel; otherwise, it may cause electric shock or death.

Note: The above figures are only intended to be a simple diagram of the appliance and may not correspond to the appearance of the units that have been purchased.

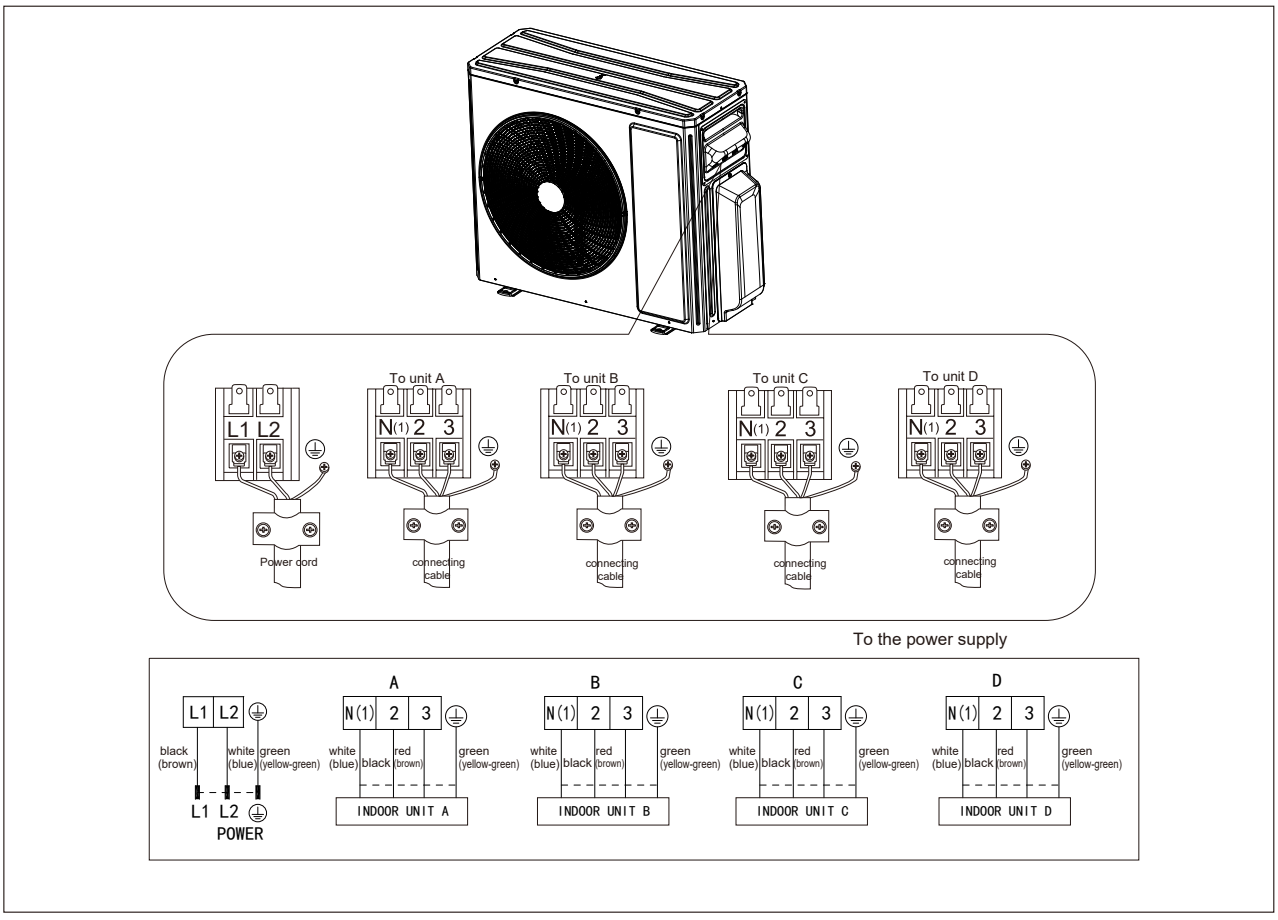

1. Remove the handle at the right side plate of the outdoor unit (one screw).
2. Remove the cable clamp, connect the power connection cable with the terminal at the row of connection and fix the connection. The fitting line distributing must be consistent with the indoor unit. terminal of line bank. Wiring should meet that of indoor unit.
3. Fix power connection wire by wire clamp.
4. Ensure wire has been fixed well.
5. Install the handle.

Including an air switch with suitable capacity, please note the following table. Air switch should be included magnet buckle and heating buckle function, it can protect the circuit-short and overload. (Caution: please do not use the fuse only for protect the circuit)

Air-conditioner	MOCP
KM42X6O KM48X6O	35A

An all-pole disconnection switch having a contact separation of at least 3mm in all pole should be connected in fixed wiring.

Wrong wire connection may cause malfunction of some electric components.After fixing cable, ensure that leads between connection to fixed point have some space.

The connection pipes and the connection wirings of the unit A, unit B, unit C, unit D and unit E must be corresponding to each other respective.

The appliance shall be installed in accordance with national wiring regulations.

WARNING: Communication cables should be laid out through cabling trough, conduit tube or cable channel; otherwise, it may cause electric shock or death.

Note: The above figures are only intended to be a simple diagram of the appliance and may not correspond to the appearance of the units that have been purchased.

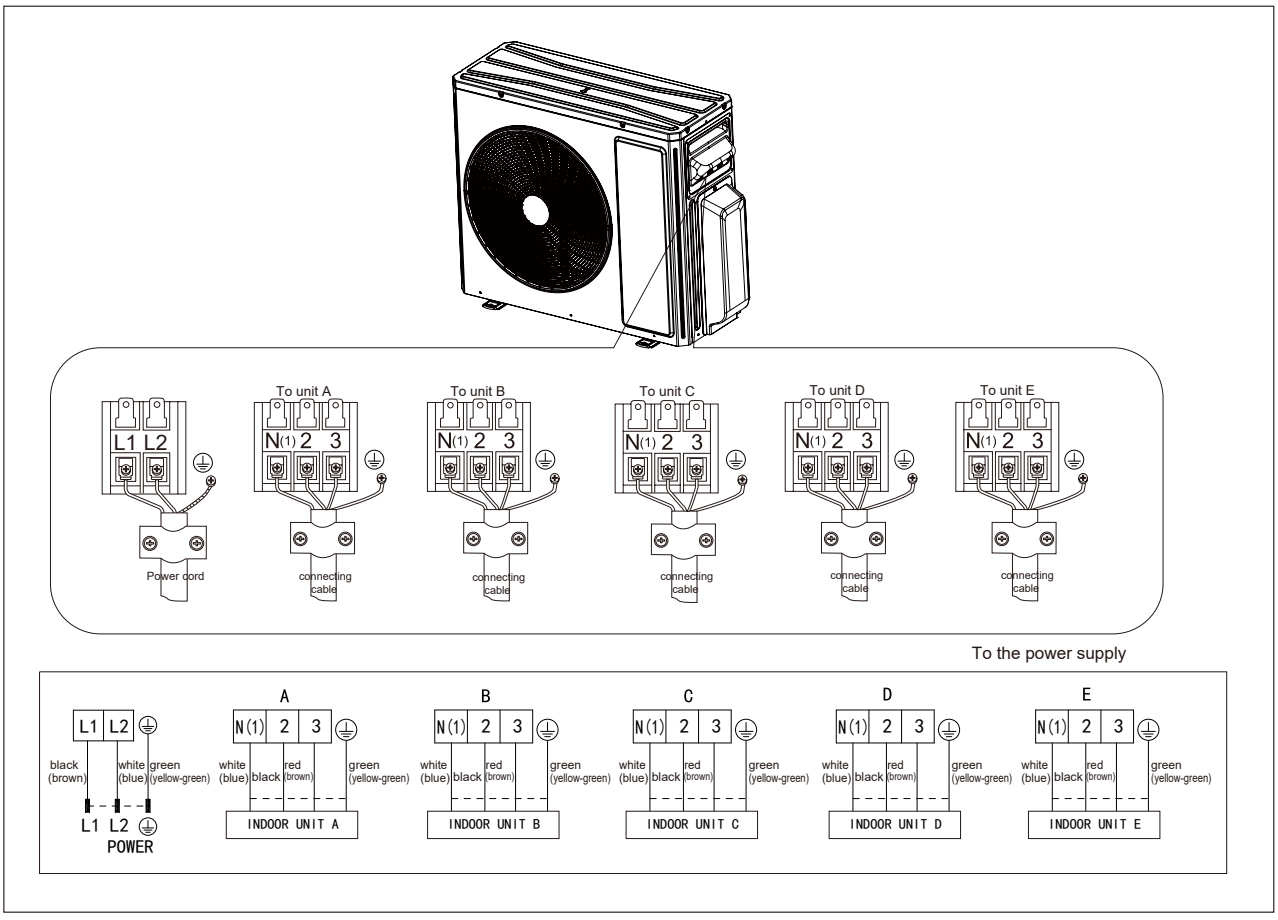

INSTALLING THE OUTDOOR UNIT — INSTALLER

Location

⚠ Use bolts to secure the unit to a flat, solid floor. When mounting the unit on a wall or the roof, make sure the support is firmly secured so that it cannot move in the event of intense vibrations or a strong wind.

- Do not install the outdoor unit in pits or air vents

Installing the pipes

⚠ Use suitable connecting pipes and equipment for the refrigerant R32.

Models(m)	18K	24K	GWHD(18)ND6JO 30K, 36K	42K, 48K
Max. connection pipe length	40	60	80	100
Max. connection pipe length (Simple one indoor unit)	20	20	25	25

⚠ The refrigerant pipes must not exceed the maximum heights 15m(18~24K), 25m (30~48K).

⚠ Wrap all the refrigerant pipes and joints.

⚠ Tighten the connections using two wrenches working in opposite directions.

Caution: Installation Must be Performed in Accordance with the NEC/CEC by Authorized Personnel Only.

Install the drain fitting and the drain hose (for model with heat pump only)

Condensation is produced and flows from the outdoor unit when the appliance is operating in the heating mode. In order not to disturb neighbours and to respect the environment,install a drain fitting and a drain hose to channel the condensate water. Install the drain fitting and rubber washer on the outdoor unit chassis and connect a drain hose to it as shown in the figure.

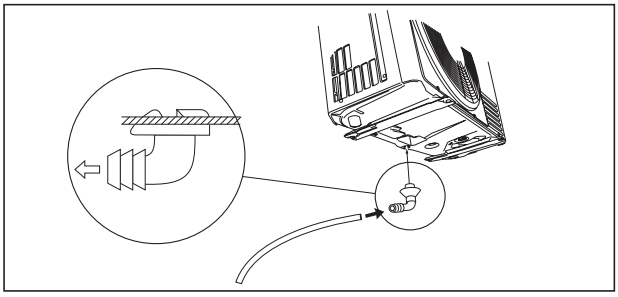

BLEEDING — INSTALLER

Humid air left inside the refrigerant circuit can cause compressor malfunction. After having connected the indoor and outdoor units, bleed the air and humidity from the refrigerant circuit using a vacuum pump.

(1) Unscrew and remove the caps from the 2-way and 3-way valves.
(2) Unscrew and remove the cap from the service valve.
(3) Connect the vacuum pump hose to the service valve.
(4) Operate the vacuum pump for 10-15 minutes until an absolute vacuum of 10 mm Hg has been reached.
(5) With the vacuum pump still in operation, close the low-pressure knob on the vacuum pump coupling. Stop the vacuum pump.
(6) Open the 2-way valve by 1/4 turn and then close it after 10 seconds. Check all the joints for leaks using liquid soap or an electronic leak device.
(7) Turn the body of the 2-way and 3-way valves. Disconnect the vacuum pump hose.
(8) Replace and tighten all the caps on the valves.

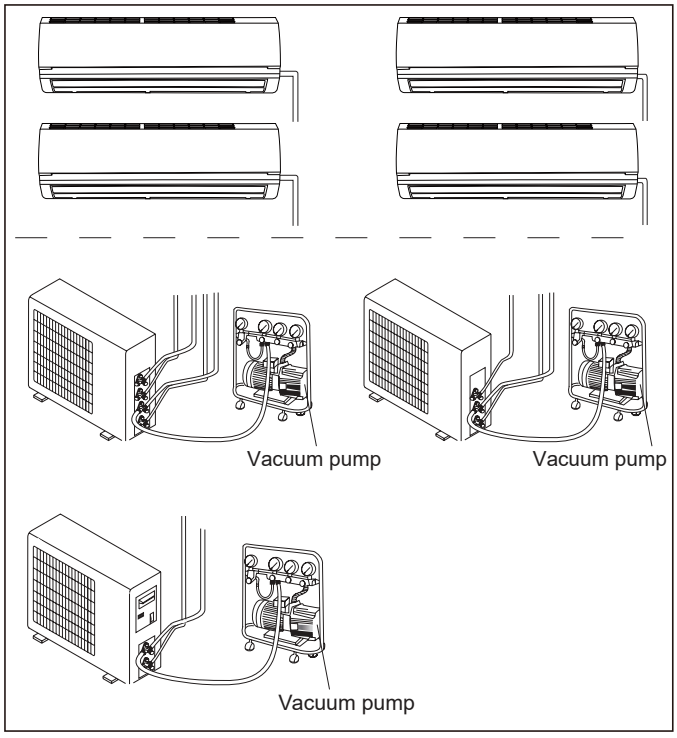

Diameter	Twisting moment (N.m)
1/4"	15-20
3/8"	35-40
5/8"	60-65
1/2"	45-50
3/4"	70-75

When the adaptor is required for the connection of indoor unit and outdoor unit, the method of pipe connection as follows:

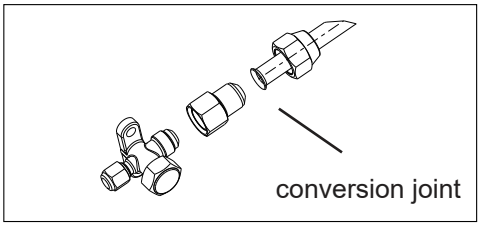

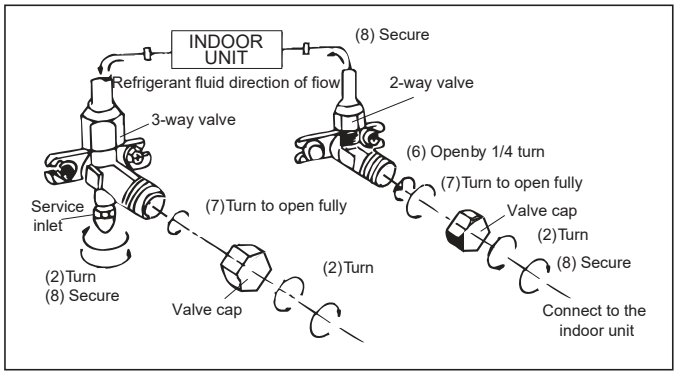

MAINTENANCE — INSTALLER

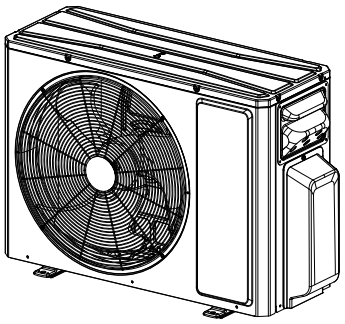

⚠ Use suitable instruments for the refrigerant R32.

⚠ Do not use any other refrigerant than R32.

⚠ Do not use mineral oils to clean the unit.

INSTALLATION DIMENSION DIAGRAM — INSTALLER

⚠ The installation must be done by trained and qualified service personnel with reliability according to this manual.

⚠ Contact service center before installation to avoid the malfunction due to unprofessional installation.

⚠ When picking up and moving the units, you must be guided by trained and qualified person.

⚠ Ensure that the recommended space is left around the appliance.

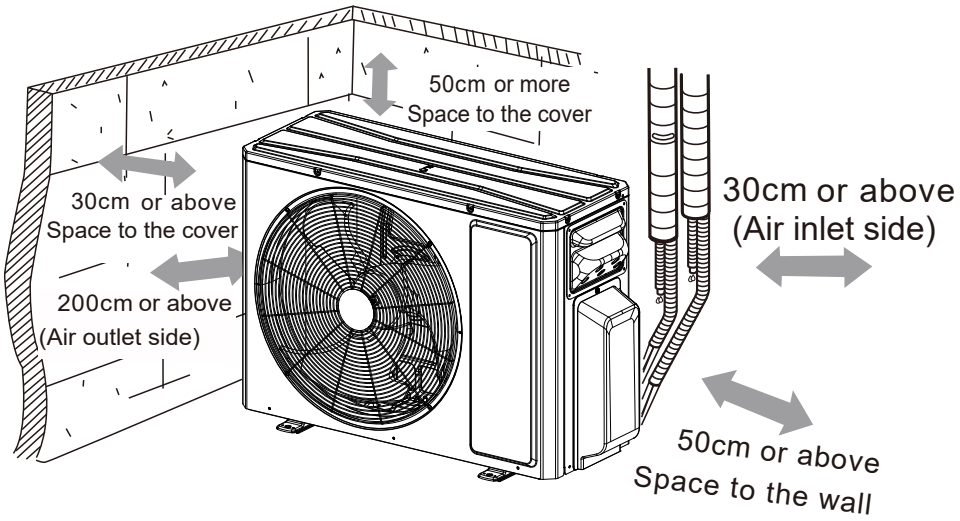

Fix the support of outdoor unit (select it according to the actual installation situation)

1. Select installation location according to the house structure.
2. Fix the support of outdoor unit on the selected location with expansion screws.

***NOTICE*:**

- Take sufficient protective measures when installing the outdoor unit.
- Make sure the support can withstand at least four times of the unit weight.
- The outdoor unit should be installed at least 3cm above the floor in order to install drain joint. (for the model with heating tube, the installation height should be no less than 20cm.)
- For the unit with cooling capacity of 2300W ~ 5000W, 6 expansion screws are needed; for the unit with cooling capacity of 6000W~ 8000W, 8 expansion screws are needed; for the unit with cooling capacity of 10000W~16000W, 10 expansion screws are needed.
- As for the shape of drainage joint, please refer to the current product. Do not install the drainage joint in the severe cold area. Otherwise, it will be frosted and then cause malfunction.

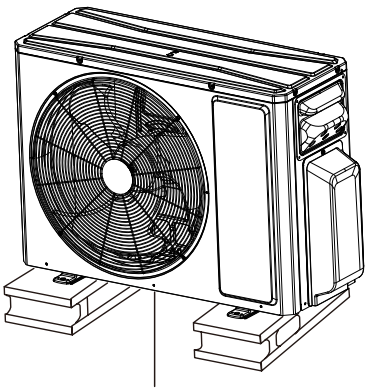

Check items	Problems owing to improper installation
Is the installation reliable?	The unit may drop, vibrate or make noises
Has the gas leakage been checked?	May cause unsatisfactory cooling (heating) effect
Is the thermal insulation of the unit sufficient?	May cause condensation and water dropping
Is the drainage smooth?	May cause condensation and water dropping
Does the power supply voltage accord with the rated voltage specified on the nameplate?	The unit may bread down or the components may be burned out
Are the lines and pipelines correctly installed?	The unit may bread down or the components may be burned out
Has the unit been safely grounded?	Risk of electrical leakage
Are the models of lines in conformity with requirements?	The unit may bread down or the components may be burned out
Are there any obstacles near the air inlet and outlet of the indoor and out-door units?	The unit may bread down or the components may be burned out
Have the length of refrigerating pipe and refrigerant charge amount been recorded?	It is not easy to decide the charge amount of refrigerant.

Aptitude requirement for maintenance man(repairs should be done only be specialists).

a. Any person who is involved with working on or breaking into a refrigerant circuit should hold a current valid certificate from an industry-accredited assessment authority,which authorises their competence to handle refrigerants safely in accordance with an industry recognised assessment specification.

b. Servicing shall only be performed as recommended by the equipment manufacturer. Maintenance and repair requiring the assistance of other skilled personnel shall be carried out under the supervision of the person competent in the use of flammable refrigerants.

That pipe-work including piping material, pipe routing, and installation shall include protection from physical damage in operation and service, and be in compliance with national and local codes and standards, such as ASHRAE 15, ASHRAE 15.2, IAPMO Uniform Mechanical Code, ICC International Mechanical Code, or CSA B52. All field joints shall be accessible for inspection prior to being covered or enclosed.

- Checks to the area

Prior to beginning work on systems containing flammable refrigerants, safety checks are necessary to ensure that the risk of ignition is minimised. For repair to the refrigerating system, the following precautions shall be complied with prior to conducting work on the system.

- Work procedure

Work shall be undertaken under a controlled procedure so as to minimise the risk of a flammable gas or vapour being present while the work is being performed.

- General work area

All maintenance staff and others working in the local area shall be instructed on the nature of work being carried out. Work in confined spaces shall be avoided.

- Checking for presence of refrigerant

The area shall be checked with an appropriate refrigerant detector prior to and during work, to ensure the technician is aware of potentially toxic or flammable atmospheres. Ensure that the leak detection equipment being used is suitable for use with all applicable refrigerants, i.e. non-sparking adequately sealed or intrinsically safe.

- Presence of fire extinguisher

If any hot work is to be conducted on the refrigerating equipment or any associated parts, appropriate fire extinguishing equipment shall be available to hand. Have a dry powder or CO2 fire extinguisher adjacent to the charging area.

- No ignition sources

No person carrying out work in relation to a refrigerating system which involves exposing any pipe work shall use any sources of ignition in such a manner that it may lead to the risk of fire or explosion. All possible ignition sources, including cigarette smoking, should be kept sufficiently far away from the site of installation, repairing, removing and disposal, during which refrigerant can possibly be released to the surrounding space. Prior to work taking place, the area around the equipment is to be surveyed to make sure that there are no flammable hazards or ignition risks. "No Smoking" signs shall be displayed.

- Ventilated area

Ensure that the area is in the open or that it is adequately ventilated before breaking into the system or conducting any hot work. A degree of ventilation shall continue during the period that the work is carried out. The ventilation should safely disperse any released refrigerant and preferably expel it externally into the atmosphere.

- Checks to the refrigerating equipment

Where electrical components are being changed, they shall be fit for the purpose and to the correct specification. At all times the manufacturer's maintenance and service guidelines shall be followed. If in doubt, consult the manufacturer's technical department for assistance.

The following checks shall be applied to installations using flammable refrigerants:

– the actual refrigerant charge is in accordance with the room size within which the refrigerant containing parts are installed;

– the ventilation machinery and outlets are operating adequately and are not obstructed;

– if an indirect refrigerating circuit is being used, the secondary circuit shall be checked for the presence of refrigerant;

– marking to the equipment continues to be visible and legible. Markings and signs that are illegible shall be corrected;

– refrigerating pipe or components are installed in a position where they are unlikely to be exposed to any substance which may corrode refrigerant containing components, unless the components are constructed of materials which are inherently

resistant to being corroded or are suitably protected against being so corroded.

- Checks to electrical devices

Repair and maintenance to electrical components shall include initial safety checks and component inspection procedures. If a fault exists that could compromise safety, then no electrical supply shall be connected to the circuit until it is satisfactorily dealt with. If the fault cannot be corrected immediately but it is necessary to continue operation, an adequate temporary solution shall be used. This shall be reported to the owner of the equipment so all parties are advised.

Initial safety checks shall include:

– that capacitors are discharged: this shall be done in a safe manner to avoid possibility of sparking;

– that no live electrical components and wiring are exposed while charging, recovering or purging the system;

– that there is continuity of earth bonding.

- Repairs to sealed components

Sealed electrical components shall be replaced.

- Repair to intrinsically safe components

Intrinsically safe components must be replaced.

- Cabling

Check that cabling will not be subject to wear, corrosion, excessive pressure, vibration, sharp edges or any other adverse environmental effects. The check shall also take into account the effects of aging or continual vibration from sources such as compressors or fans.

- Detection of flammable refrigerants

Under no circumstances shall potential sources of ignition be used in the searching for or detection of refrigerant leaks. A halide torch (or any other detector using a naked flame) shall not be used.

The following leak detection methods are deemed acceptable for all refrigerant systems.

Electronic leak detectors may be used to detect refrigerant leaks but, in the case of flammable refrigerants, the sensitivity may not be adequate, or may need re-calibration. (Detection equipment shall be calibrated in a refrigerant-free area.) Ensure that the detector is not a potential source of ignition and is suitable for the refrigerant used. Leak detection equipment shall be set at a percentage of the LFL of the refrigerant and shall be calibrated to the refrigerant employed, and the appropriate percentage of gas (25% maximum) is confirmed.

Leak detection fluids are also suitable for use with most refrigerants but the use of detergents containing chlorine shall be avoided as the chlorine may react with the refrigerant and corrode the copper pipe-work.

NOTE: Examples of leak detection fluids are

– bubble method,

– fluorescent method agents.

If a leak is suspected, all naked flames shall be removed/extinguished.

If a leakage of refrigerant is found which requires brazing, all of the refrigerant shall be recovered from the system, or isolated (by means of shut off valves) in a part of the system remote from the leak. Removal of refrigerant shall be according to clause Removal and evacuation.

- Removal and evacuation

When breaking into the refrigerant circuit to make repairs – or for any other purpose –conventional procedures shall be used. However, for flammable refrigerants it is important that best practice be followed, since flammability is a consideration. The following procedure shall be adhered to:

– safely remove refrigerant following local and national regulations;

– evacuate;

– purge the circuit with inert gas (optional for A2L);

– evacuate (optional for A2L);

– continuously flush or purge with inert gas when using flame to open circuit; and

– open the circuit.

The refrigerant charge shall be recovered into the correct recovery cylinders if venting is not allowed by local and national codes. For appliances containing flammable refrigerants, the system shall be purged with oxygen-free nitrogen to render the appliance safe for flammable refrigerants. This process might need to be repeated several times. Compressed air or oxygen shall not be used for purging refrigerant systems.

For appliances containing flammable refrigerants, refrigerants purging shall be achieved by breaking the vacuum in the system with oxygen-free nitrogen and continuing to fill until the working pressure is achieved, then venting to atmosphere, and finally pulling down to a vacuum (optional for A2L). This process shall be repeated until no refrigerant is within the system (optional for A2L). When the final oxygen-free nitrogen charge is used, the system shall be vented down to atmospheric pressure to enable work to take place.

The outlet for the vacuum pump shall not be close to any potential ignition sources, and ventilation shall be available.

- Charging procedures

  In addition to conventional charging procedures, the following requirements shall be followed.

  – Ensure that contamination of different refrigerants does not occur when using charging equipment Hoses or lines shall be as short as possible to minimise the amount of refrigerant contained in them.

  – Cylinders shall be kept in an appropriate position according to the instructions.

  – Ensure that the refrigerating system is earthed prior to charging the system with refrigerant.

  – Label the system when charging is complete (if not already).

  – Extreme care shall be taken not to overfill the refrigerating system.

  Prior to recharging the system, it shall be pressure-tested with the appropriate purging gas. The system shall be leak-tested on completion of charging but prior to commissioning. A follow up leak test shall be carried out prior to leaving the site.

- Decommissioning

  Before carrying out this procedure, it is essential that the technician is completely familiar with the equipment and all its detail. It is recommended good practice that all refrigerants are recovered safely. Prior to the task being carried out, an oil and refrigerant sample shall be taken in case analysis is required prior to re-use of recovered refrigerant. It is essential that electrical power is available before the task is commenced.

  a) Become familiar with the equipment and its operation.
  b) Isolate system electrically.
  c) Before attempting the procedure, ensure that:
     - mechanical handling equipment is available, if required, for handling refrigerant cylinders;
     - all personal protective equipment is available and being used correctly;
     - the recovery process is supervised at all times by a competent person;
     - recovery equipment and cylinders conform to the appropriate standards.
  d) Pump down refrigerant system, if possible.
  e) If a vacuum is not possible, make a manifold so that refrigerant can be removed from various parts of the system.
  f) Make sure that cylinder is situated on the scales before recovery takes place.
  g) Start the recovery machine and operate in accordance with instructions.
  h) Do not overfill cylinders. (No more than 80% volume liquid charge).
  i) Do not exceed the maximum working pressure of the cylinder, even temporarily.
  j) When the cylinders have been filled correctly and the process completed, make sure that the cylinders and the equipment are removed from site promptly and all isolation valves on the equipment are closed off.
  k) Recovered refrigerant shall not be charged into another refrigerating system unless it has been cleaned and checked.

- Labelling

  Equipment shall be labelled stating that it has been de-commissioned and emptied of refrigerant. The label shall be dated and signed. For appliances containing flammable refrigerants, ensure that there are labels on the equipment stating the equipment contains flammable refrigerant.

- Recovery

  When removing refrigerant from a system, either for servicing or decommissioning, it is recommended good practice that all refrigerants are removed safely.

  When transferring refrigerant into cylinders, ensure that only appropriate refrigerant recovery cylinders are employed. Ensure that the correct number of cylinders for holding the total system charge are available. All cylinders to be used are designated for the recovered refrigerant and labelled for that refrigerant (i.e. special cylinders for the recovery of refrigerant). Cylinders shall be complete with pressure-relief valve and associated shut-off valves in good working order. Empty recovery cylinders are evacuated and, if possible, cooled before recovery occurs.

  The recovery equipment shall be in good working order with a set of instructions concerning the equipment that is at hand and shall be suitable for the recovery of the flammable refrigerant. If in doubt, the manufacturer should be consulted. In addition, a set of calibrated weighing scales shall be available and in good working order. Hoses shall be complete with leak-free disconnect couplings and in good condition.

  The recovered refrigerant shall be processed according to local legislation in the correct recovery cylinder, and the relevant waste transfer note arranged. Do not mix refrigerants in recovery units and especially not in cylinders.

  If compressors or compressor oils are to be removed, ensure that they have been evacuated

to an acceptable level to make certain that flammable refrigerant does not remain within the lubricant. The compressor body shall not be heated by an open flame or other ignition sources to accelerate this process. When oil is drained from a system, it shall be carried out safely.

Transportation, marking and storage for units Transport of equipment containing flammable refrigerants.

Attention is drawn to the fact that additional transportation regulations may exist with respect to equipment containing flammable gas. The maximum number of pieces of equipment or the configuration of the equipment permitted to be transported together will be determined by the applicable transport regulations.

Marking of equipment using signs

Signs for similar appliances used in a work area are generally addressed by local regulations and give the minimum requirements for the provision of safety and/or health signs for a work location.

All required signs are to be maintained and employers should ensure that employees receive suitable and sufficient instruction and training on the meaning of appropriate safety signs and the actions that need to be taken in connection with these signs.

The effectiveness of signs should not be diminished by too many signs being placed together.

Any pictograms used should be as simple as possible and contain only essential details.

Disposal of equipment using flammable refrigerants

See national regulations.

Storage of equipment/appliances

The storage of the appliance should be in accordance with the applicable regulations or instructions, whichever is more stringent.

Avoid other heat sources or direct sun light.

Avoid a place where is possible for inflammable gas to leak out.

Storage of packed (unsold) equipment

Storage package protection should be constructed such a way that mechanical damage to the equipment inside the package will not cause a leak of the REFRIGERANT CHARGE.

The maximum number of pieces of equipment permitted to be stored together will be determined by local regulations.

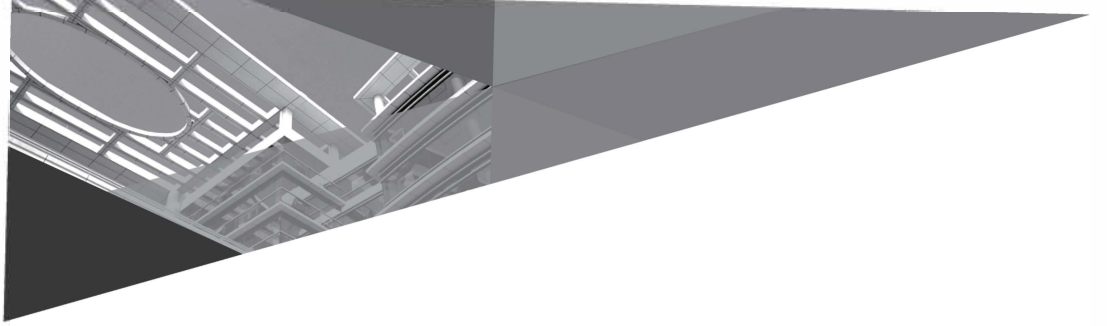

KINGHOME